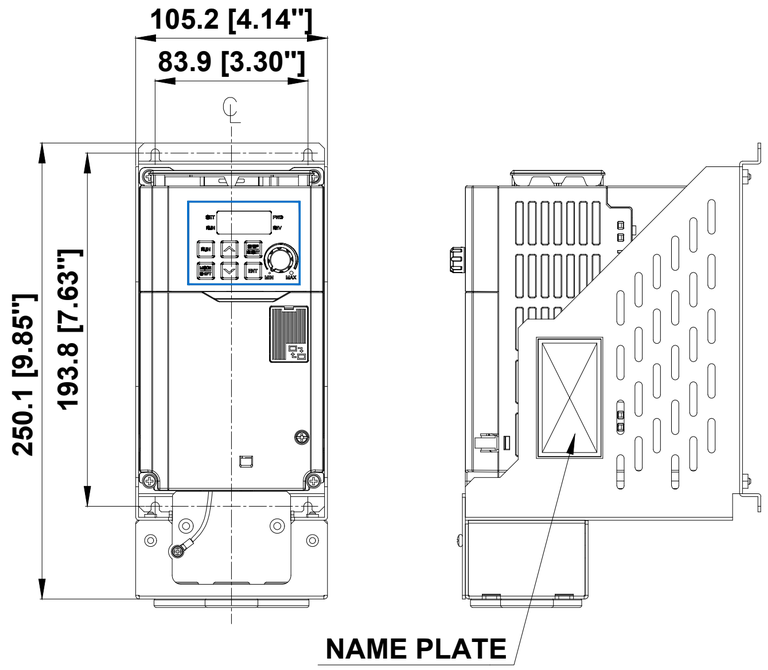

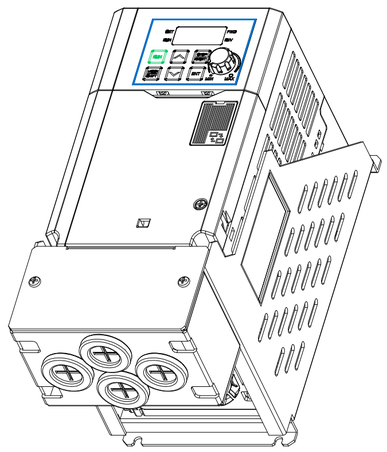

3D View

Drive + Conduit Case

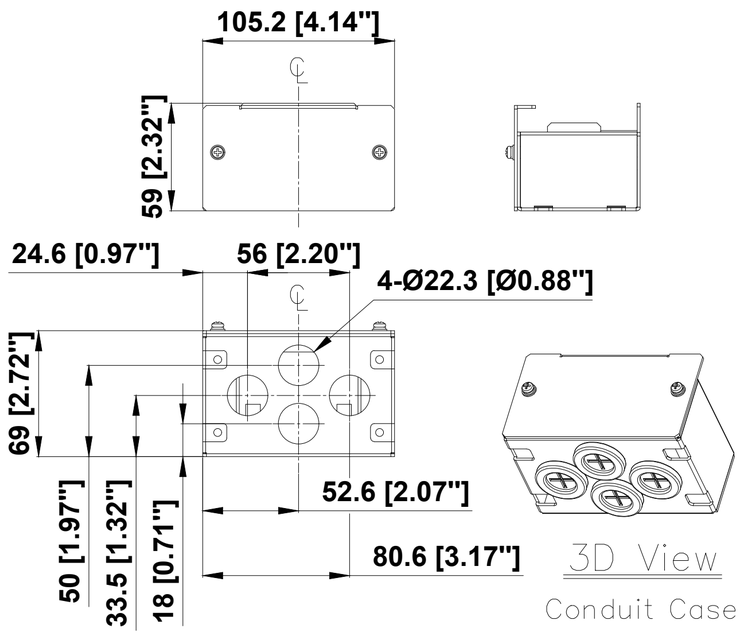

3D View

Conduit Case

* After removing Rubber Packing

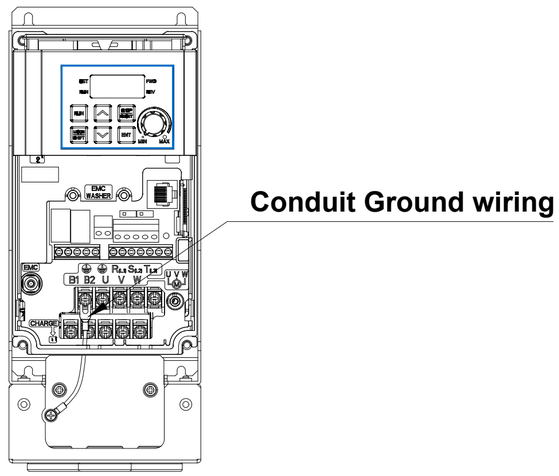

* After removing I/O cover

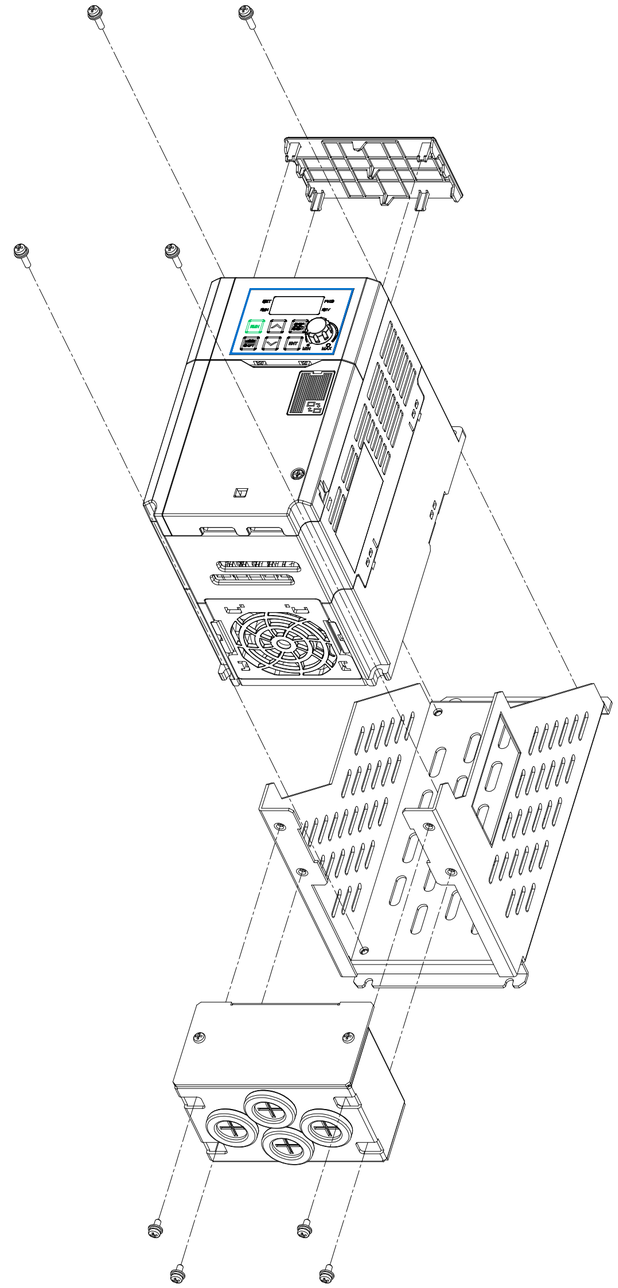

적 용 제 품 Applied Model	
200V	400V
LSLV0015G100-2	LSLV0015G100-4
LSLV0022G100-2	LSLV0022G100-4

정 CHANGE 개	LS ELECTRIC			LSLV-G100	매 수 SHEETS
	삼 각 법 3RD ANGLE PROJECTION	척 도 SCALE / , NS	단 위 DIMENSION mm [inch]	작 성 일 DATE . .	도면명칭 TITLE: G100 Conduit OPTION DRAWING FRAME SIZE B
	THIS DOCUMENT AND INFORMATION CONTAINED IN IT ARE CONFIDENTIAL AND CANNOT BE COPIED OR DISCLOSED IN WHOLE OR IN PART WITHOUT PERMISSION				도면번호 DWG. NO.
					관련도번 REF. NO.